725

MDDC 725

MDDC 725

UNITED STATES
ATOMIC ENERGY COMMISSION
OAK RIDGE
TENNESSEE

THE USE OF HEARING-AID TYPE TUBES IN PORTABLE COUNTING-RATE METERS AND AMPLIFIERS

by

L. Nierman

Published for use within the Atomic Energy Commission. Inquiries for additional copies and any questions regarding reproduction by recipients of this document may be referred to the Documents Distribution Subsection, Publication Section, Technical Information Branch, Atomic Energy Commission, P. O. Box E, Oak Ridge, Tennessee.

Inasmuch as a declassified document may differ materially from the original classified document by reason of deletions necessary to accomplish declassification, this copy does not constitute authority for declassification of classified copies of a similar document which may bear the same title and authors.

Document Declassified: 3/6/47

This document consists of 10 pages.

Digitized by the Internet Archive
in 2011 with funding from
University of Florida, George A. Smathers Libraries with support from LYRASIS and the Sloan Foundation

http://www.archive.org/details/useofhearingaidt00usat

THE USE OF HEARING-AID TYPE TUBES IN PORTABLE COUNTING-RATE METERS AND AMPLIFIERS

(Work done November 1944 through April 1945)

L. Nierman

The purpose of this report is to make available the general results of development work done on portable counting-rate meters used with proportional counters; such portable instruments have hitherto been comparatively impractical because of the excessive weight of the electronic equipment. By adaptation of standard circuits to the low-power tubes used in hearing-aids and incorporation of components now available, a great reduction in size and weight has been achieved. This general report will be followed by detailed reports on specific instruments using the circuits and materials described here.

A SIX-TUBE PROPORTIONAL AMPLIFIER AND COUNTING-RATE METER.

Figure 1 is the schematic diagram of a six-tube model, consisting of a four-stage amplifier and a pulse-height selector. The amplifier consists of a pair of degenerative two-stage amplifiers. The overall gain of the amplifier, from grid of the input stage to grid of the pulse-height selector, is a little less than 200. In frequency response, the amplifier is flat to well beyond 200 kc., thus providing sufficient pulse discrimination for the separation of an alpha pulse-height distribution from an intense beta pulse-height distribution. The negative feedback network consists of a voltage divider between the plate of the second tube and ground, impressing on the cathode of the first tube of each two-stage amplifier a portion of the output of that two-stage amplifier. The tubes used, Raytheon CK505-AX, are designed for operation with the filaments of two tubes in series across a $1\frac{1}{2}$ volt cell. It will be noted that the circuit used requires three A batteries for the four-stage amplifier, the total A drain being 90 milliamperes at 1 .4 volts: one-third of the filament power delivered to the amplifier is wasted in resistors placed in series with filaments. A two-stage amplifier using 1L4 tubes gives substantially the same performance and requires only slightly more filament power, but the B battery current drain is considerably in excess of that required for the circuit of Figure 1. In attempting to reduce the number of filament batteries and to eliminate the power loss due to voltage-dropping resistors in series with the filaments, a number of other feedback circuits (wherein the filaments could be operated at the same A. C. potential) were tried, including common cathode resistors in the odd stages, plate-grid feedback over

three stages (instead of plate-cathode feedback over two stages as in Figure 1) and feedback to screen grids. None of these could be made to give the desired performance and at the same time be reasonably stable. It was likewise found impractical to replace the cathode resistors with chokes or to achieve the desired broadband amplification by video-type compensating coupling networks.

The pulse height selector is an adaptation of the basic circuit developed by Wendell Bradley for standard vacuum tubes and used in numerous applications as a pulse-former, pulse-height selector and counting-rate meter. The last tube is normally cut off. The circuit is so designed that any signal at the input to the pair which is less than a predetermined level will produce no appreciable plate current in the last tube. However, a negative pulse at the input which is greater than the predetermined level will produce in the last tube a rectangular current pulse whose amplitude and duration is unaffected by the shape or amplitude of the input pulse. Thus the D. C. component of the plate current in the second tube is proportional to the number of pulses above the desired height appearing at the input, and the number of these pulses is measured by placing a meter in the plate circuit, with an appropriate series resistor and shunting condenser to give the desired speed of response to statistical fluctuations.

The chief requirements in adapting this pulse-height selector circuit to use with extremely low-power tubes are first, a sensitivity sufficient to make it operate properly with the limited amplifier gain which is available, and second, the production of current pulses of sufficient amplitude to drive available D'Arsonval D. C. meter movements.

The portion of the random input pulses which will not be counted because of the resolving time of the circuit may be calculated. Let these losses, equal to unity minus the ratio of the counts registered to the actual number of input pulses, be represented by L. Let T represent the resolving time of the circuit, i.e., the period during which the circuit has not sufficiently recovered from the effects of a previous pulse to respond to another pulse, and let t represent the average time between input pulses. t is equal to 1/R, where R is the average rate of occurrence of input pulses random in time, R being expressed in input pulses per unit time. Then L may be approximated closely at T/t, or RT. (See Strong, Procedures in Experimental Physics. 1938. p. 95). In the circuits discussed, i.e., pulse-height selecting counting-rate Meters, for any given size of input pulse, the resolving time is proportional to the length of the pulse formed, or T is equal to kd, where d is the duration of each output pulse and k is a constant depending on the tubes and parameters used in the circuit. Thus L = Rkd. But i = RId, where i is the average current as read on a meter and I is the current which is drawn during the rectangular pulse. Thus

L = ki/I, or the portion of counts lost is equal to the product of the ratio of resolving time to pulse length and the ratio of average (D.C) current to peak current. It may be seen that with standard radio type tubes, a fairly insensitive meter can be used without greatly impairing linearity of calibration.

Let us apply the above analysis to the design of the present pulse-height selecting counting-rate meter. It must first be noted that k is not a constant independent of pulse height, but becomes smaller as the input pulse size is increased; in other words, when the circuit has been adjusted to respond to given amplitude of input pulse, and it is fed with pulses slightly above that amplitude, it will have a resolving time of k_1 times the duration of the output pulse; if the size of the pulses is increased the resolving time will be k_2 times the duration of the output pulse (which will be unaffected), k_2 being smaller than k_1. In the present case, the pulse-height selector will respond to a pulse of about 0.3 volt amplitude. When pulses of this size are impressed, k is about 6. With pulses of ten times this amplitude, k is down to as low as 2, the circuit being "forced" to respond to new pulses although it has not completely recovered from the previous pulse. This effect may be observed with an oscilloscope at the grid of the last tube. Measurement of the resolving time for any input pulse amplitude is easily made by using a pulse generator input with phones on the output. As the frequency of the input is increased, the frequency of the output will be the same as the input frequency up to a point where it suddenly drops to one-half the pulse generator frequency; at a further point, the frequency of the output will drop to one-third the pulse generator frequency. The resolving rime for any given input pulse amplitude is the period of the lowest input frequency at which the output frequency falls.

With relatively equal pulse amplitudes at the input, as with GM tubes. it is possible, by use of the above equation, to predict the linearity of this type of counting-rate meter with considerable accuracy. It is to be noted that if, as in most cases, k, the ratio of resolving time to pulse length, is a constant, the non-linearity will be the same for all ranges, where a range switch is provided. As an example, suppose a particular circuit has a resolving time three times the pulse length for the pulse size to be counted and further suppose the peak current delivered during the output pulses is 1 milliampere. Then it appears that if a 50 microampere meter is used, 15% of the counts will be missed when the meter reads full scale. (It must, however , be noted that the above analysis cannot be used with accuracy for losses over 20% or so because of the approximation involved in the original derivation.)

In the design of the present instrument, involving pulses varying in amplitude by a factor of 50 or more, the computation can not be made with

any exactness. Nevertheless, it is clear from the above discussion that in order to keep the non-inearity negligible with a 20 microampere movement, the most sensitive obtainable for such uses, the current during the pulses must be of the order of 1 milliampere. This consideration, together with the sensitivity requirement, led to the present design. To achieve high sensitivity without danger of oscillation, it is necessary to bias the last tube somewhat beyond cut-off and have high gain in the first tube of the pair. It will be observed that the latter is an ordinary degenerative amplifier till the input signal reaches such amplitude as to effect the "triggering" action. The latter occurs when the incremental current in the cathode resistor caused by current flow in the last tube is sufficient to overcome the decrement in current in the input tube of the pair caused by the negative signal pulse, thus making the total effect of the cathode resistor regenerative, rather than degenerative. High peak current is obtained by using a bias battery to cut off the last tube in the absence of signal, instead of relying wholly on the voltage drop which appears across the cathode resistor as a result of normal plate current in the input tube of the pair. This device allows the use of a much smaller cathode resistor than would otherwise be required, thus increasing the gain of the first tube and decreasing the load on the last tube. The counting-rate meter has no perceptible non-linearity over the full scale.

A model of this instrument, after calibration with a pulse generator, was used with a boron-walled neutron counter at various distances from a radium-beryllium source. The counter was surrounded by a paraffin moderator. When readings (averaging by eye) of the counting-rate meter were compared with runs with a standard proportional amplifier and scaler, the results agreed within 3%.

The model built is incorporated in a 6 inch cubical chassis, excluding high voltage batteries for the counter and B batteries, both of which are intended to be carried in a knapsack. It weighs $6\frac{1}{2}$ pounds, including the A batteries, which are in the chassis.

A FOUR TUBE PROPORTIONAL AMPLIFIER AND COUNTING-RATE METER.

It was found that the standards of accuracy required in the survey work for which these instruments are primarily designed are such as to make possible the use of a much lighter and simpler unit, requiring only one adjustment in addition to the range switch and the on-off switch. It is remarkably free of microphonic effects. A schematic diagram of this circuit is shown in Figure 2.

The amplifier is a two-stage resistance coupled nondegenerative

design. To discriminate against pickup and microphonics the grid and screen circuit time constants are such as to produce an amplifier with no flat region in its frequency response curve, which reaches a maximum in the vicinity of 12,000 cycles, where the gain is about 400, and is down to 0.707 of its peak value at 4500 cycles and 35,000 cycles.

The pulse-height selector is essentially the same as that used in the instrument previously described except that the bias batteries are eliminated. The non-linearity thus introduced is, however, negligible in comparison with the error limits within which the instrument is designed to make measurements.

This circuit, unlike the one previously described, is not intended to count all the pulses produced by the proportional counter. The plan for use of this instrument is to provide a convenient calibration sample to be slipped onto the counter at intervals of time (not yet determined) in the field, thus eliminating much of the error due to drifts in the batteries or circuit. In initial calibration of the instrument, a considerable percentage of counts will be deliberately lost. The calibration will be held constant by adjusting the single control until the standard sample gives the same reading as upon initial calibration. When this can no longer be done without bringing in spurious counts which appear in the absence of radiation, the batteries must be replaced. It is expected that the batteries incorporated in the present design will last about two weeks with the instrument in use six to eight hours daily.

The model currently under laboratory test is incorporated in an aluminum chassis 5'' x $4\frac{1}{2}$ x $3\frac{1}{2}$'', weighing less than three pounds, including all batteries except the high voltage for the counter, but excluding the meter. which is in a separate case 2 3/4'' x $3\frac{1}{2}$'', connected to the circuit chassis by microphone cable. It is expected that this model will shortly be in the field, together with appropriate probes and light-weight high voltage batteries, used as a portable proportional alpha rate-meter. Later a portable slow neutron rate-meter will be constructed. The present general report will be followed by subsequent reports on these instruments when all features of their design are complete.

TUBES

Before designing the circuits described above a survey was made of low filament-power tubes available, since most of the bulk of the portable vacuum tube power supply is in the A batteries. A number of brands and types of hearing-aid tubes were considered and tested. Of these, those made by Raytheon are the most satisfactory. Zenith and Western Electric tubes, comparable in performance, are no longer manufactured,

although samples were made available for testing. Hytron tubes require far more filament power than the others mentioned. It appears that a number of the hearing aids formerly made with other tubes have been redesigned for use with the Raytheon tubes. The electrometer tubes made by Victoreen also may be adapted advantageously to certain A. C. applications. In the following summary of the tubes found most suitable, the filament voltage is designated on the basis of 1.5 volt cell operation, but in all cases there is relatively little change in emission as the cell runs down to 1.2 volts. All tubes are filament type.

Raytheon CK505AX - Pentode. 30 mils. at 0.75 volts. G_m with 45 v. on plate and screen 175 micromhos. Maximum current as diode (suppressor internally connected to filament) approximately 1.5 mils.

Raytheon CK509AX - Triode. 30 mils. at 0.75 volts. Amplification factor 20. Plate resistance 150,000 ohms.

Raytheon CK510AX - Double tetrode 50 mils. at 0.75 volts. Designed for use as double triode with virtual cathode formed at first grid, which is common to both sections. Amplification factor of each second grid 20. High plate resistance, of the order of 1/2 megohm. Low plate currents.

Raytheon CK512AX - Pentode 20 mils. at 0.75 volt G_m with plate and screen at 45 volts. 120.

Raytheon CK502AX, 503AX, 506AX, 507AX - Power pentodes. 30 and 50 mils at 1.5 volts. G_m up to 500. A CK-507AX has been incorporated in a BG survey instrument model built by the Health Division to drive a small speaker in place of the usual headphones.

Victoreen VE32 - Electrometer triode. 10 mils. at 1.5 volts. Amplification factor 1.75. Maximum plate current as diode approximately 2 mils.

Victoreen VE124 - Electrometer tetrode. 10 mils. at 1.5 volts. When connected as high-mu triode, amplification factor is 17, with sharp cut-off characteristic. Maximum plate current as diode approximately 2 mils. Because of the relatively high peak current, a pair of triode-connected VE124 tubes make an excellent counting rate meter where high sensitivity is not

required, as in the Mark 1, Model 31A GM tube portable meter.

All of the above tubes are made without bases, tinned leads being brought directly out of the envelope and soldered into the circuit. Some of the Raytheon tubes are available with bases under the same numbers without the designation AX.

Tube-checking is done here by applying standard voltages to the electrodes and observing the plate current. A simple tube-checker incorporating a 1 mil. meter has been constructed; a switch inserts $1\frac{1}{2}$ volts bias on the control grid for a rough measurement of transconductance. The tubes are inserted on a screw-type terminal board.

COMPONENTS

In mounting circuits in small spaces, it is necessary to utilize smaller components than those appearing in most general electronics stockrooms. In fixed resistors, 1/2 watt sizes such as those made by Allen-Bradley and Erie will ordinarily fulfill the requirements. (See Landsman's Reports CP2746 and CP2861 for voltage and temperature coefficients, life tests and other data on various brands of resistors). In variable resistors, the midget rheostats and potentiometers made by most manufacturers may be found sufficiently compact. But it is well to note that there are available smaller units made especially for hearing-aid and instrument use, such as the Centralab NS series and the Stackpole Type PSM.

In choosing components, the greatest saving of space is to be accomplished by selection of appropriate condensers. In capacities greater than 0.001 microfarad, the tubular paper condensers ordinarily used, rated at 400 volts, are extremely bulky. The midget paper condensers manufactured by Dumont Electric Company as their number P1N, rated at 150 volts, occupy a small portion of the volume required for the usual paper condensers. They have proven particularly useful in 0.1 and 1 microfarad sizes. Small 150 volt bathtub condensers are made by Mallory. Although the usual small mica condensers will in most cases be adequate for capacities less than 0.001 microfarad, the button-type silver-micas made by Centralab may be considered.

Concerning batteries, it has heretofore been the custom to use flashlight cells for filament power, although hearing-aid type B batteries have commonly been employed. Flashlight cells, designed for high-drain service over short periods, will be found to give much less life per unit weight on low drains than the hearing-aid batteries which are designed to supply

filament power. The plug-in feature of many of the hearing-aid batteries also simplifies battery replacement.

It should be pointed out that many of the coaxial cables in general use, such as RG26/U, are poorly suited for portable applications as probe cables because of their lack of flexibility. For low-current high voltage applications, it is possible to procure cable of smaller diameter, and thus much more flexible, without sacrificing low capacity. Thus RG6/U cable has been used at 2500 volts with a proportional counter without corona effect or other spurious counts. At lower voltages smaller diameter cables may be used. These include RG 58/U and RG62/U.

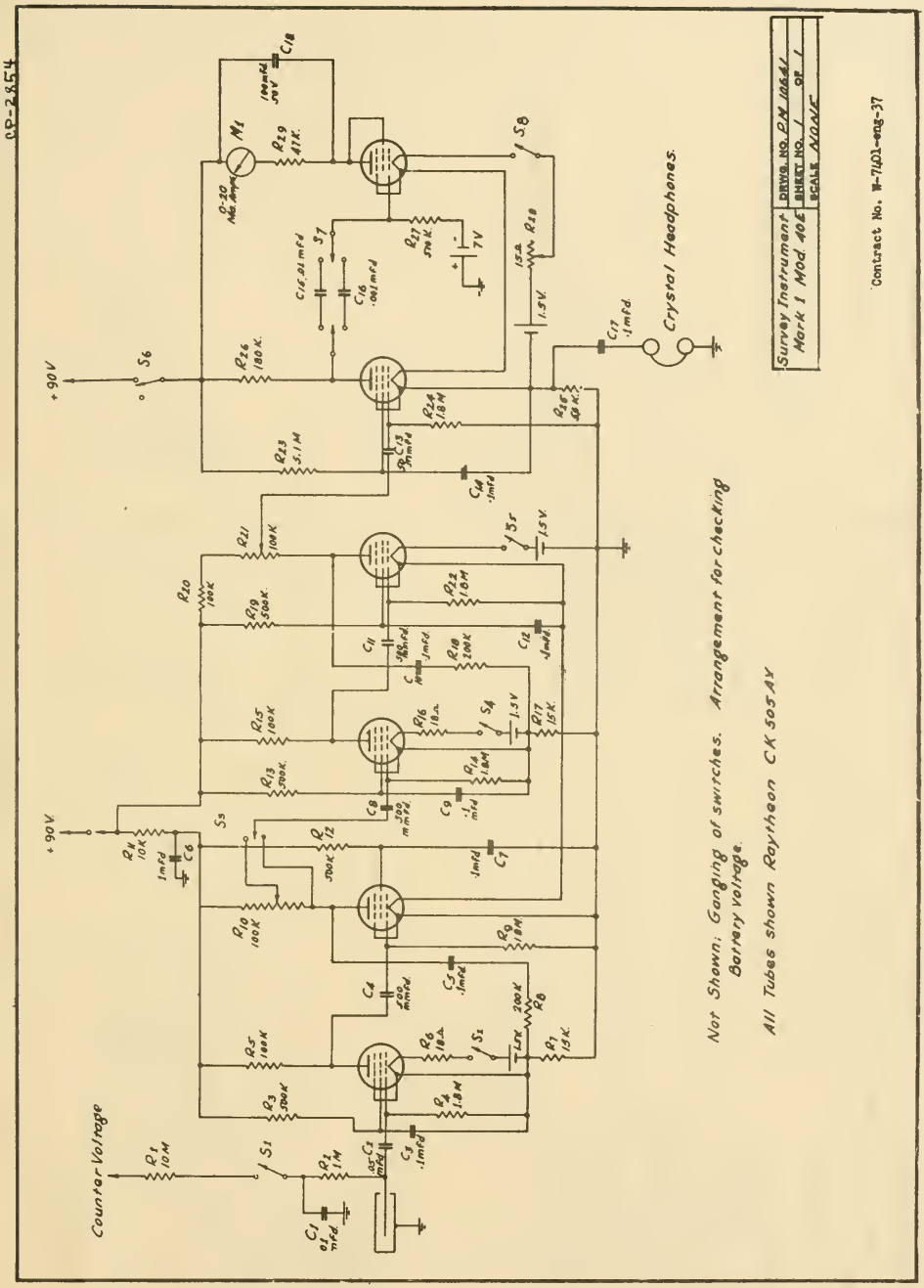
CP-2854
Survey Instrument
Mark 1 Mod. 40E
DRWG. NO. P.M. 10641
SHEET NO. 1 OF 1
SCALE NONE
Contract No. W-7401-eng-37
Crystal Headphones.
Counter Voltage
+90V
Not Shown: Ganging of switches. Arrangement for checking Battery voltage.
All Tubes shown Raytheon CK 505AX

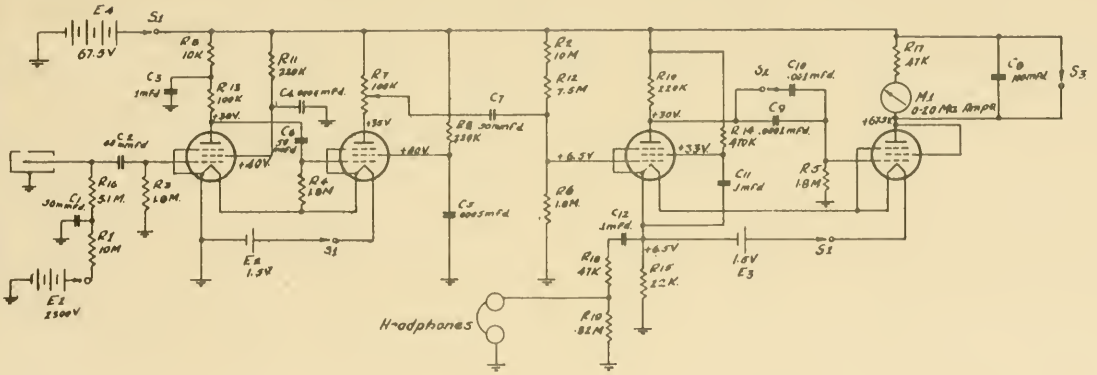

RESISTORS

R1. 10 Meg. ½W (Filter R_1C_1 used only where E_1 is not enclosed in chassis)
R2. 10 Meg. ½ W 10%
R3. R4, R5. 1.8 Meg ½ W.
R6 1.8 Meg ½ W 10%
R7. 100 K Linear Pot. Recommended Centralab N 116
R8. 10 K. ½ W.
R9. R10, R11. 220 K, ½ W.
R12. 7.5 Meg. ½ W 10%
R13. 100 K. ½ W.
R14. 470 K. ½ W.
R15. 2.2 K ½ W 10%
R16. 5.1 Meg. ½ W.
R17, R18. 47 K. ½ W.

R19. .82 Meg ½ W.

Note:
Tolerance 20% unless otherwise stated.

CONDENSERS

C1. 30mmfd 10,000 V Silver Ceramic Centralab Type 850 (See Comment on R1).
C2. 40mmfd 10,000 V Silver Ceramic Centralab Type 853
C3. 1 mfd 150 V paper. Dumont Electric Co. Type P1N-13
C4, C5. .0005 mfd Mica.
C6, C7. 50 mmfd Mica.
C8. 100 mfd. low Voltage Electrolytic Condenser Recommended - Cornell-Dubilier. Type BRH 50 V.
C9. .0001 mfd Mica.
C10. .001 mfd Mica.
C11, C12. .1 mfd 150 V. Dumont Electric Co. Type P1N-10
Tubes; Raytheon CK 505 AX.

Survey Instrument Mark 1 Mod 41 E	DRWG. NO. PC-1064A
	SHEET NO. 1 OF 1
	SCALE NONE

Contract No. W-7401-eng-37

UNIVERSITY OF FLORIDA
3 1262 08910 5422